ESTABLISHMENT OF NATURALLY POLLUTED INSULATOR TEST STATION AT 500/220kV NKI GRID STATION, KARACHI

Annexure-A

EMPLOYER'S REQUIREMENTS / TERMS OF REFERENCE (TORs)

1. The scope of work includes supply of all the goods (except Transformer and Insulators; which will be provided by NTDC/NESPAK), services, installation and testing & commissioning of complete Insulator Test Station at NKI Grid Station, Karachi in accordance with Test Station Schematics, CIGRE Technical Brochure TB-333 and other applicable international standards, practices and codes.
2. Apart from transportation of the supplied material, transportation of Transformer and Insulators from NTDC warehouse at New Kot Lakhpat Lahore to NKI Grid Station site and storage is included in Contractor's scope.
3. Indicative schematic drawing of the envisaged test station is attached herewith for your reference. Accessories, items or hardware not mentioned in the drawing but required for the successful implementation, testing & commissioning of the subject Test Station are deemed to be included in the Contractor's scope.
4. Contractor shall perform the preliminary survey with NTDC and NESPAK representatives to select the best suitable location for site and prepare layout and detailed work approach accordingly. After the successful completion of the station, as-built drawings shall be prepared and submitted to NESPAK for reference and record.
5. In addition to other equipment, test station shall be equipped with "allMeteo wireless weather station complete" or equivalent meteorological conditions measurement system capable of measuring and recording weather characteristics including wind speed & direction, average relative humidity, temperature, accumulated rainfall, UV B solar radiation etc.
6. Metrological Station's data shall be easily extractable remotely from anywhere and saved.
7. Considering that the site is located within a close vicinity of sea coast, necessary measures i.e. anti-corrosive protective coatings on ferrous item (in addition to standard hot dipped galvanization) shall be adopted to reduce the risk of corrosion and deterioration of metal parts.
8. The schematic drawing is indicative. Contractor shall submit the detailed drawings for review and approval before the commencement of works.
9. All the relevant technical data, brochures and installation manuals of complete Metrological Station shall be submitted for review and approval.
10. Contractor shall propose and get approval of the suitable hardware for the installation of insulators.
11. Circuit breakers/changeover switches shall be from the reputable brands (e.g. Schneider, Legrand, ABB or equivalent)
12. Brand of cables shall be FAST, Newage or equivalent.
13. Appropriate outdoor type tagging shall be done on all the insulators, cables, and equipment. A Nameplate shall also be installed for the Test Station.
14. Complete site area must be furnished with finished tuff block pavement including clearing, grubbing, filling, levelling, dressing and compaction of the complete site area using borrow fill material with compaction of 95% proctor density with mechanical means with any lead and lift for raising of the complete site area over 100mm PCC 140kg/cm2 over 100mm thick well compacted sand filling over min. 60mm thick interlocking tuff block pavers (Izhar or equivalent) with side retaining kerb stone fixed with PCC 140kg/cm2 (if required) complete in all respects as per Engineer's instructions. (estimated area: 150 sq. meter).
15. Test Station shall be provided with a boundary wall/fence to ensure the protection against any sort of unwanted access.
16. 01 (one) No. 12x8 feet outdoor type furnished portable container (with heat insulated walls) shall be provided for establishing the site office for the Testing Station. The container shall be equipped with 01 No. 1.5 ton DC inverter Air Conditioner, wooden table with chairs, lighting fixtures and power & light plugs. The container shall be placed on appropriately prepared brick masonry pad on suitably raised level from ground.

TEST STATION SCHEMATIC

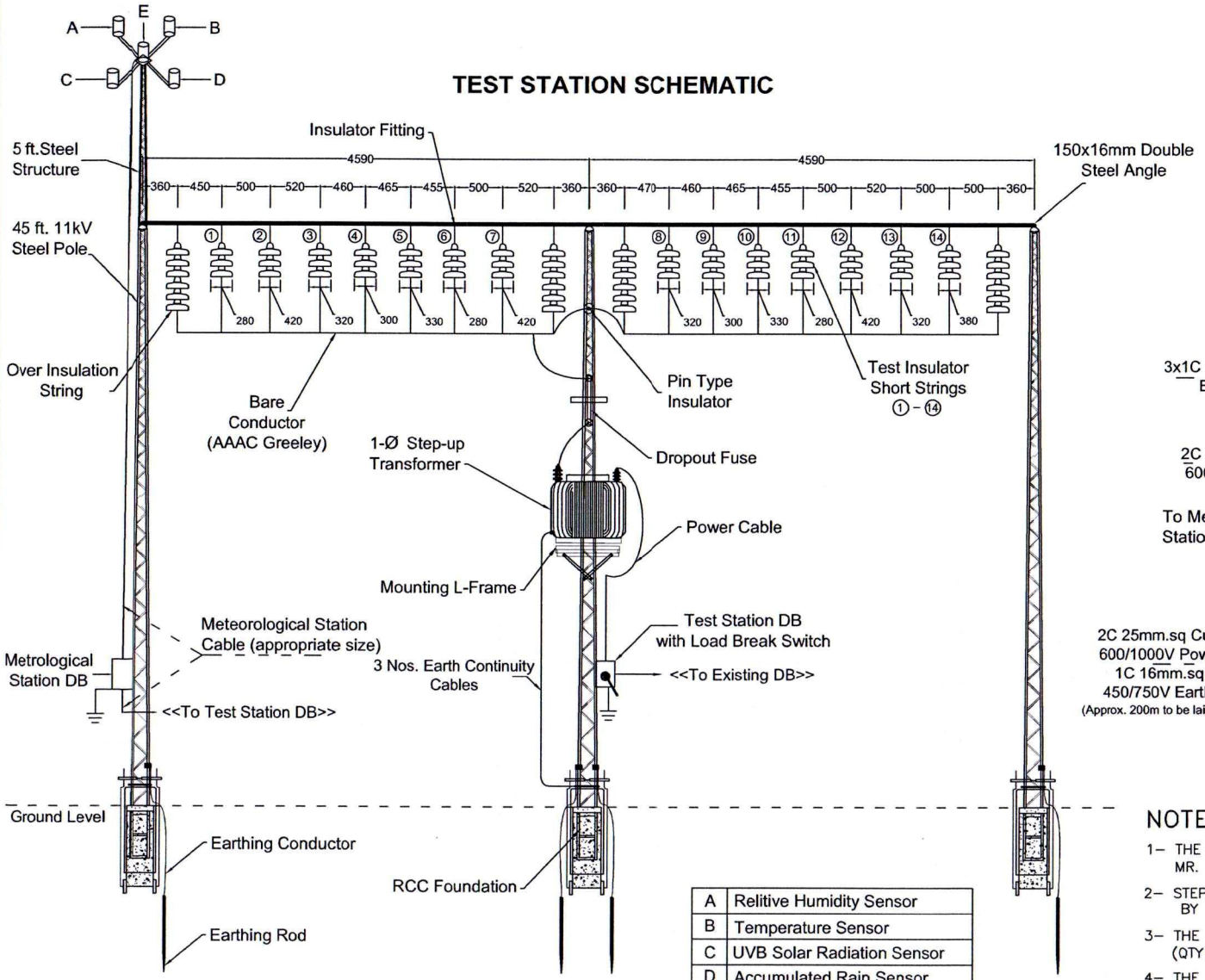

A	Relitive Humidity Sensor
B	Temperature Sensor
C	UVB Solar Radiation Sensor
D	Accumulated Rain Sensor
E	Wind Speed & Direction Sensor

SINGLE LINE DIAGRAM

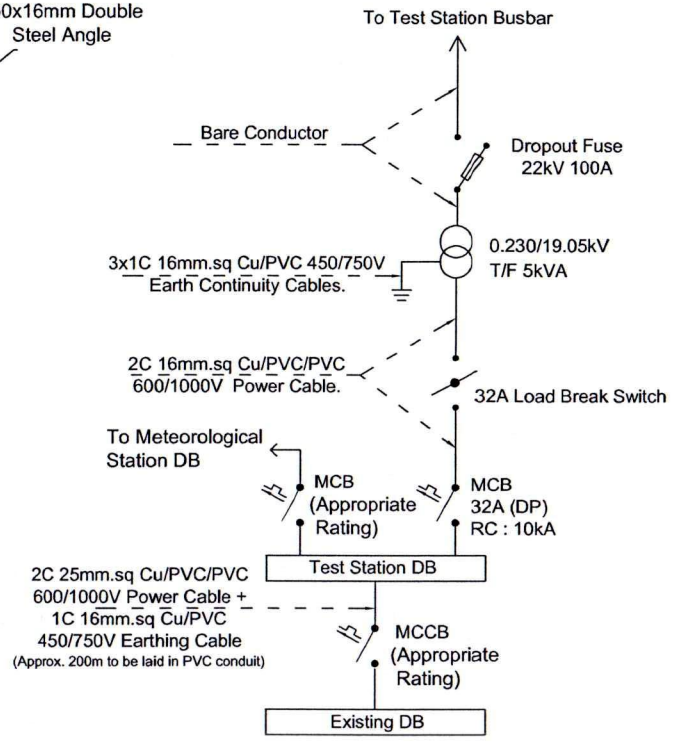

NOTES:

1- THE SCHEMATIC IS BASED ON THE CONCEPT PROVIDED BY MR. RAOUF ZNAIDI (TUNISIA)

2- STEP-UP TRANSFORMER AND TEST INSULATORS TO BE PROVIDED BY NTDC

3- THE RESISTANCE OF ANY FOOTING SHALL NOT BE MORE THAN 01 Ohm. (QTY OF RODS SHOWN IS INDICATIVE).

4- THE DIMENSIONS SHOWN ARE IN mm.

5- THE DRAWING SHALL BE READ IN CONJUNCTION WITH THE TERMS OF REFERENCE (TORs).

NATIONAL TRANSMISSION & DESPATCH COMPANY LIMITED (NTDC)

NATIONAL ENGINEERING SERVICES PAKISTAN (PVT.) LTD.

POWER & MECHANICAL (P&M) DIVISION
NESPAK HOUSE, 1-C, BLOCK N, MODEL TOWN EXTENSION
LAHORE, PAKISTAN.

REV.	DATE	DESCRIPTION	STATUS
04			
03			
02			
01			

DRAWN BY	SA
SUBMITTED	-
RECOMMENDED	-
CHD./VER.	-
APPROVED	-

ESTABLISHMENT OF NATURALLY POLLUTED INSULATOR TEST STATIONS IN PAKISTAN

DWG. TITLE: ESTABLISHMENT OF NATURALLY POLLUTED ENERGIZED INSULATOR TEST STATION AT 500/220kV NKI GRID STATION, KARACHI

SCALE: -

DATE: SEPT 2021

DWG. NO.: 4029/169/TD/01TS02

REV: 00